Heathfield&Co

Installation Guide

CEILING LIGHT | LEIGH

General Notes

- Before carrying out installation, please ensure that you have read and understood this document carefully.
- This fitting is suitable for dry, indoor use only.
- This fitting is UL compliant. If you require a specific size of ceiling rose for UL use, please inform our sales team.
- Switch off electricity and ensure the correct wiring procedure & regulations have been checked with a qualified electrician.
- Ensure the fitting is being fixed to a suitable surface, strong enough to support the weight of the product.
- Ensure that suitable fixings are used - additional fixing screws are not included.
- The ceiling mount and fixing screws are supplied already attached to the fitting.
- Save these instructions for future reference.
- If you have any additional questions, please contact our sales team.

Caution

Installation of this fitting must be carried out by a qualified electrician.

Warning

Electricity must be switched off at the mains fuse box before installing this fitting.

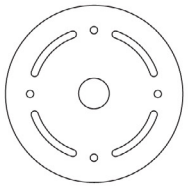

Ceiling Mount
x1

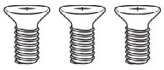

Fixing Screws
x3

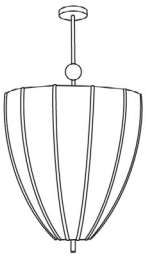

Leigh
x1

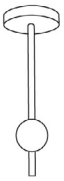

Ceiling Rose & Rod
x1

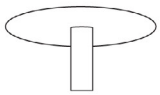

Diffuser & Finial
x1

H&
CO

LIGHT BEYOND DESIGN

www.heathfield.co.uk | + 44 (0) 1732 350450 | sales@heathfield.co.uk
Unit 1, Priory Road, Tonbridge, Kent, TN9 2AF, United Kingdom. © 2026 Heathfield & Co. All rights reserved.

Heathfield&Co

Installation Guide

CEILING LIGHT | LEIGH

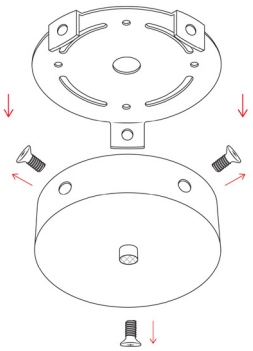

STEP 1

- Switch off the electricity at the mains fuse box. Turning off the power at the switch is not sufficient.
- Remove the 3x fixing screws to separate the ceiling mount from the ceiling rose.

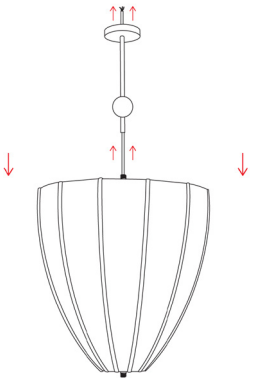

STEP 2

- Thread the wire located at the top of the linen shade through the rod.
- Screw the rod and ceiling rose onto the screw thread at the top of the linen shade.

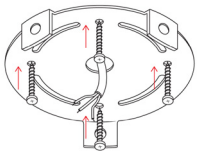

STEP 3

- Fix the ceiling mount to the ceiling using appropriate fixings.
- Make electrical connections, following the below wiring diagram. Please note you will need to hold the weight of the pendant while connecting the wires.

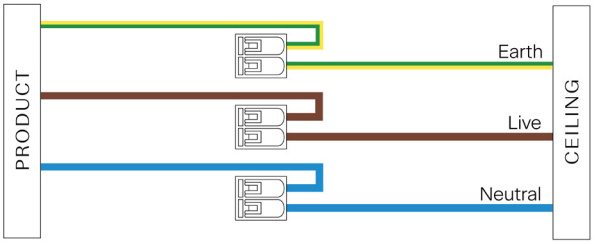

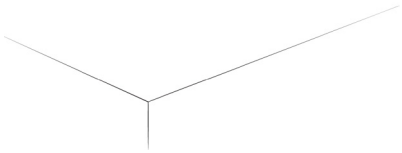

H&
CO

LIGHT BEYOND DESIGN

www.heathfield.co.uk | + 44 (0) 1732 350450 | sales@heathfield.co.uk
Unit 1, Priory Road, Tonbridge, Kent, TN9 2AF, United Kingdom. © 2026 Heathfield & Co. All rights reserved.

Heathfield&Co

Installation Guide

CEILING LIGHT | LEIGH

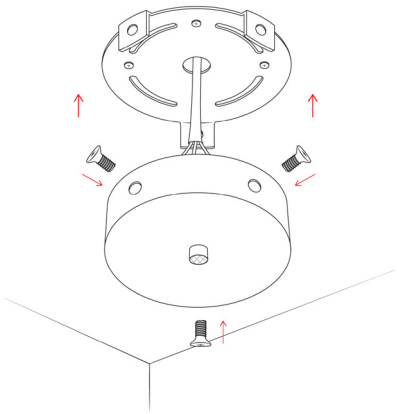

STEP 4

- Offer the ceiling light up to the ceiling mount & screw the fixing screws into the ceiling rose.

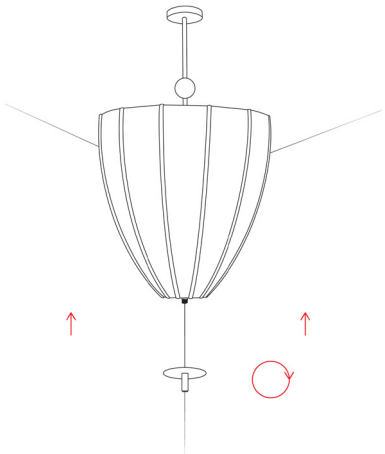

STEP 5

- Screw in the lightbulbs.
- Screw the diffuser onto the rod using the threaded finial.

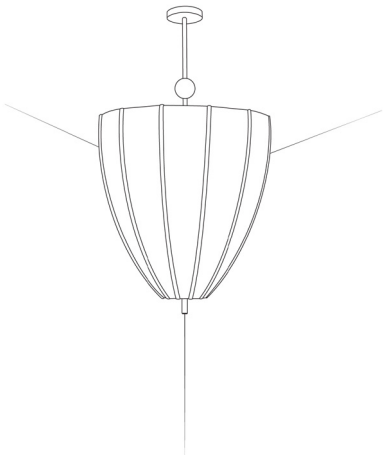

STEP 6

- Switch the power back on.

H&
CO

LIGHT BEYOND DESIGN

www.heathfield.co.uk | + 44 (0) 1732 350450 | sales@heathfield.co.uk
Unit 1, Priory Road, Tonbridge, Kent, TN9 2AF, United Kingdom. © 2026 Heathfield & Co. All rights reserved.

Heathfield&Co

Installation Guide

CEILING LIGHT | LEIGH

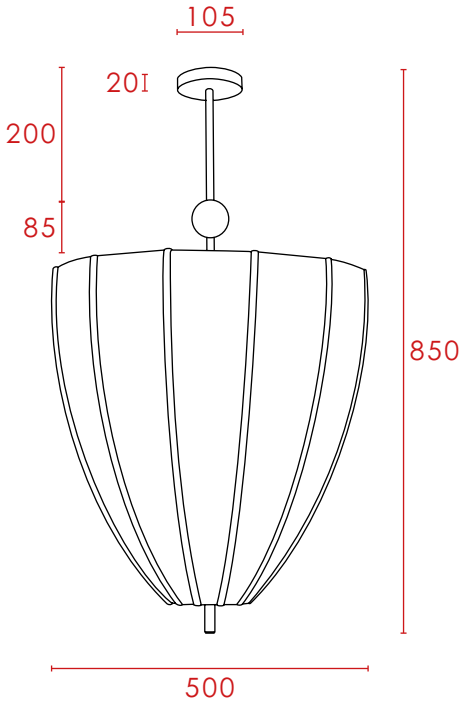

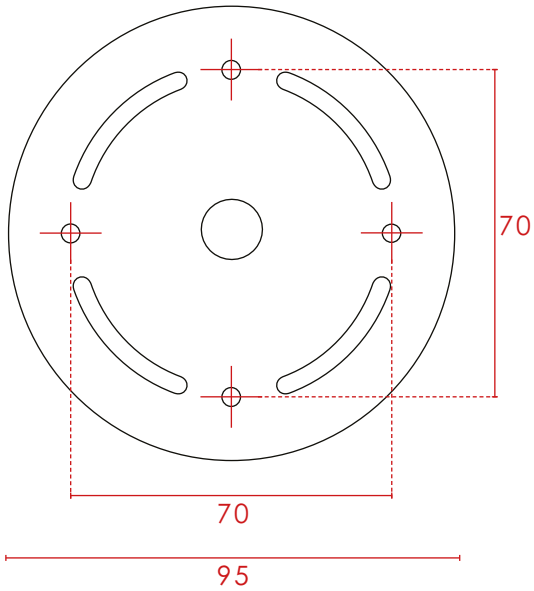

Dimensions in mm and approximate.

H&
CO

LIGHT BEYOND DESIGN

www.heathfield.co.uk | + 44 (0) 1732 350450 | sales@heathfield.co.uk
Unit 1, Priory Road, Tonbridge, Kent, TN9 2AF, United Kingdom. © 2026 Heathfield & Co. All rights reserved.