Heathfield&Co

Product Specification Sheet

WALL LIGHT | RAE



PRODUCT INFORMATION
Base Code: WL-RAE0-ABRS-ALAB
Material: Metal & Alabaster
Finish shown: White
Metalwork: Antique Brass

TECHNICAL INFORMATION
Weight: 1.5kg / 3.3lbs
Switching & Plug: Hardwired
Lamping: 1x E27 Pluto LED Bulb. 3W 2700K 240LM.
Supplied with our recommended Tala bulb (when selected).

TOTAL HEIGHT: 270 mm / 10 3/4”
TOTAL WIDTH: 120 mm / 4 3/4”
PROJECTION: 200 mm / 8”

UKCA / CE / UL COMPLIANT*

*If you require a specific size of backplate for UL use, please inform our sales team

WARRANTY
10 years*

FINISHING NOTE
Alabaster is a natural material with distinctly unique formations, markings and colouration. It is part of its charm that no two lamps are exactly the same.

CLEANING INSTRUCTIONS
The finishes on this luminaire only require regular cleaning with a soft dry duster. Abrasive or chemical cleaners may harm the finish and should not be used.

FIXING NOTE
It is the buyer’s responsibility to ensure that suitable fixings are used.

*Please refer to our Terms & Conditions for further information.

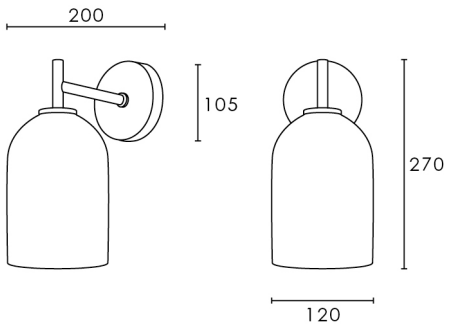

Dimensions in mm and approximate.

H&
CO

LIGHT BEYOND DESIGN

www.heathfield.co.uk | + 44 (0) 1732 350450 | sales@heathfield.co.uk
Unit 1, Priory Road, Tonbridge, Kent, TN9 2AF, United Kingdom. This specification is subject to our standard Terms & Conditions, a copy of which can be found at heathfield.co.uk. © 2026 Heathfield & Co. All rights reserved.